9GA0424P6G001 With pulse sensor with PWM control

PWM duty cycle

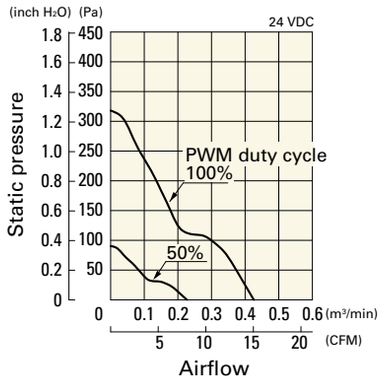

Operating voltage range

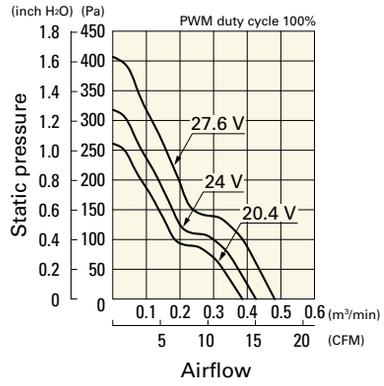

PWM duty - Speed characteristics example

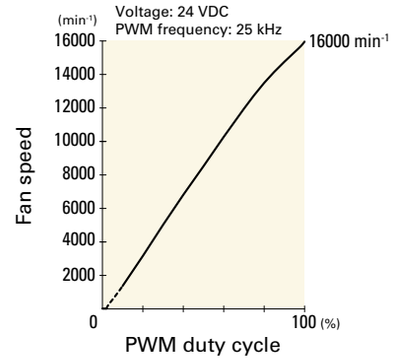

9GA0424P6H001 With pulse sensor with PWM control

PWM duty cycle

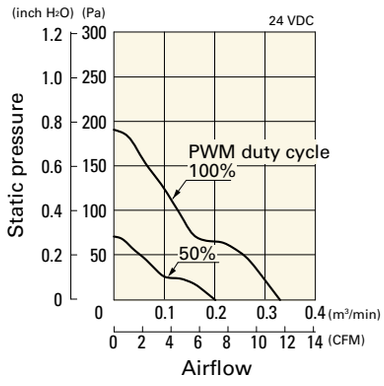

Operating voltage range

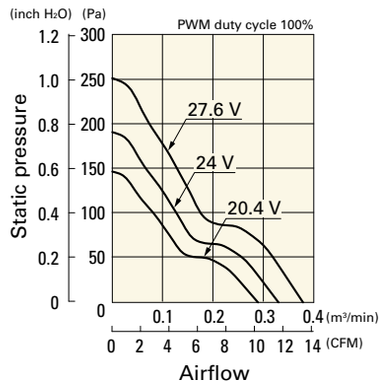

PWM duty - Speed characteristics example

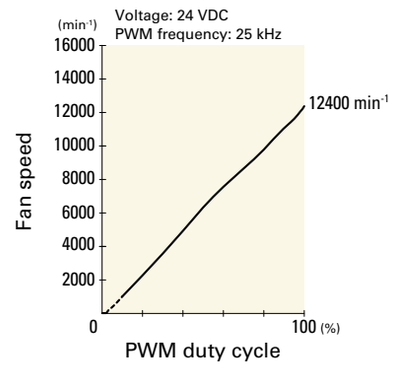

9GA0424P6F001 With pulse sensor with PWM control

PWM duty cycle

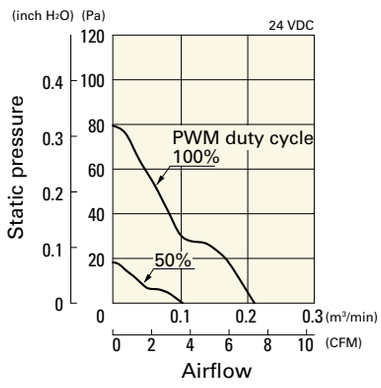

Operating voltage range

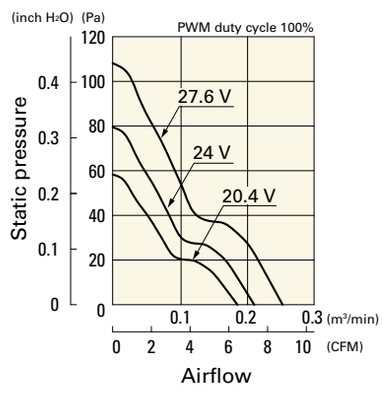

PWM duty - Speed characteristics example

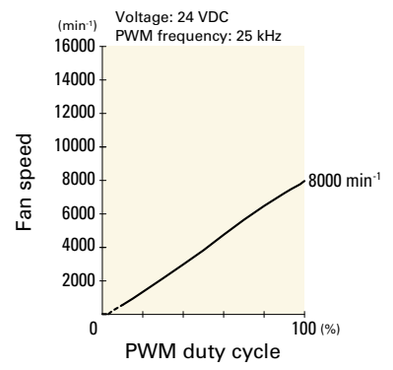

Dimensions (unit: mm)

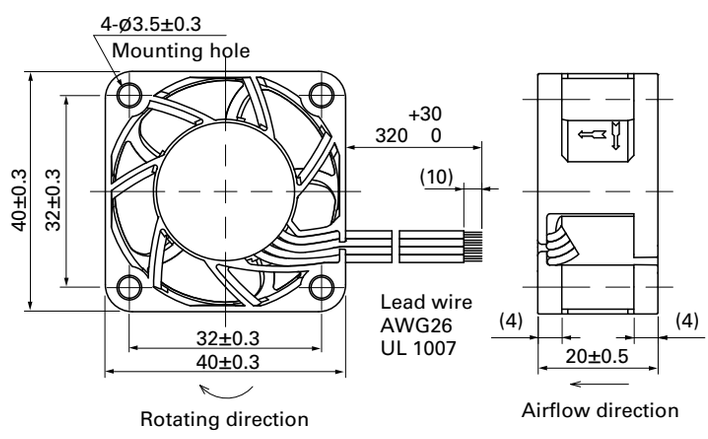

Beijing Hengrui Mechanical and Electrical Equipment Co,Ltd
+86 10-62547612 zhangyu@bjhengrui.cn en.bjhengrui.com

Inlet side, Outlet side

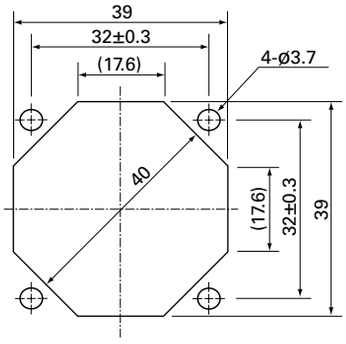

Options

Finger guards page: p. 598

Model no.: 109-059, 109-059H

Beijing Hengrui Mechanical and Electrical Equipment Co,Ltd
+86 10-62547612 zhangyu@bjhengrui.cn en.bjhengrui.com

40×40×20 mm

San Ace 40 9P type

General Specifications

- Material ..... Frame: Plastic (Flammability: UL 94V-0), Impeller: Plastic (Flammability: UL 94V-1)
- Expected life ..... See the table below. (L10 life: 90% survival rate for continuous operation in free air at 60˚C, rated voltage) Expected life at 40°C is for reference only.
- Motor protection function ..... Locked rotor burnout protection, Reverse polarity protection For details, please refer to p. 616.
- Dielectric strength ..... 50/60 Hz, 500 VAC, for 1 minute (between lead wire conductors and frame)
- Insulation resistance ..... 10 MΩ min. at 500 VDC (between lead wire conductors and frame)
- Sound pressure level (SPL) ..... A-weighted sound pressure level (SPL) at 1 m away from the air inlet.
- Storage temperature ..... -30 to +70˚C (Non-condensing)
- Lead wire ..... ⊕Red ⊖Black or Blue Sensor Yellow
- Mass ..... 45 g

Specifications

The models listed below **have ribs and a pulse sensor.**

Model no.	Rated voltage [V]	Operating voltage range [V]	Rated current [A]	Rated input [W]	Rated speed [min⁻¹]	Max. airflow [m³/min]	Max. airflow [CFM]	Max. static pressure [Pa]	Max. static pressure [inchH₂O]	SPL [dB (A)]	Operating temperature [˚C]	Expected life [h]
109P0405F601	5	4.5 to 5.5	0.25	1.25	6500	0.183	6.5	45.1	0.181	28	-20 to +70	60000/60˚C (90000/40˚C)
109P0405M601			0.12	0.6	5000	0.136	4.8	26.5	0.106	24		
109P0412F601	12	7 to 13.8	0.09	1.08	6500	0.183	6.5	45.1	0.181	28		
109P0412M601		8 to 13.8	0.06	0.72	5000	0.136	4.8	26.5	0.106	24		
109P0424F601	24	14 to 27.6	0.06	1.44	6500	0.183	6.5	45.1	0.181	28		
109P0424B601		20.4 to 27.6	0.06	1.44	5200	0.14	4.9	28.3	0.114	25		

Note: Sensor and control options are available for selection. Refer to the table on p. 645.

Airflow - Static Pressure Characteristics

109P0405F601 With pulse sensor

Operating voltage range

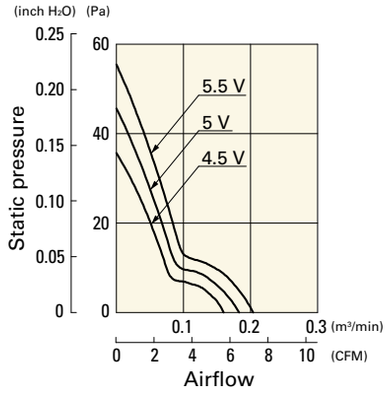

109P0405M601 With pulse sensor

Operating voltage range

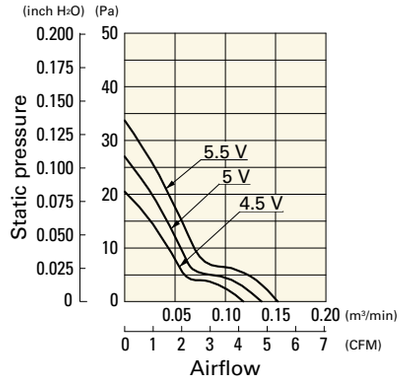

109P0412F601 With pulse sensor

Operating voltage range

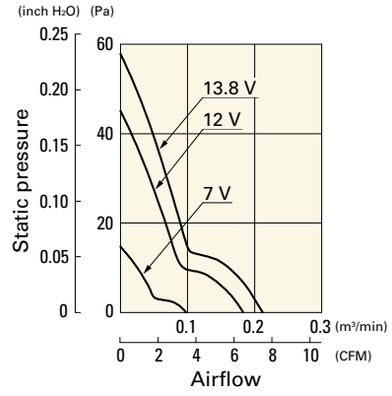

Beijing Hengrui Mechanical and Electrical Equipment Co,Ltd
+86 10-62547612 zhangyu@bjhengrui.cn en.bjhengrui.com

109P0412M601 With pulse sensor

Operating voltage range

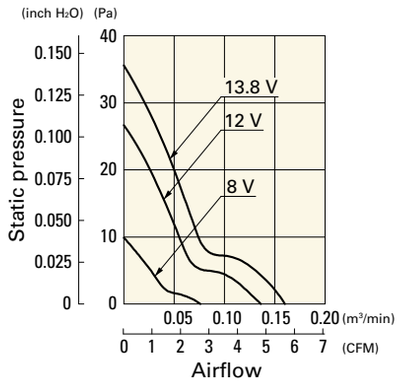

109P0424F601 With pulse sensor

Operating voltage range

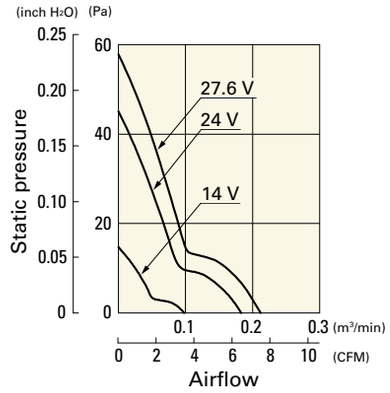

109P0424B601 With pulse sensor

Operating voltage range

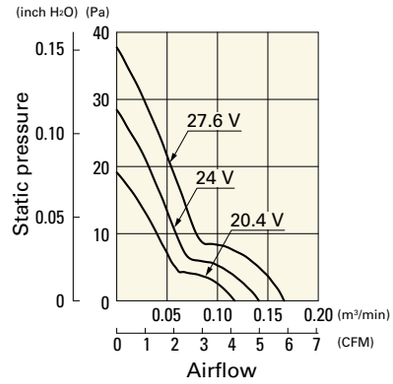

Dimensions (unit: mm)

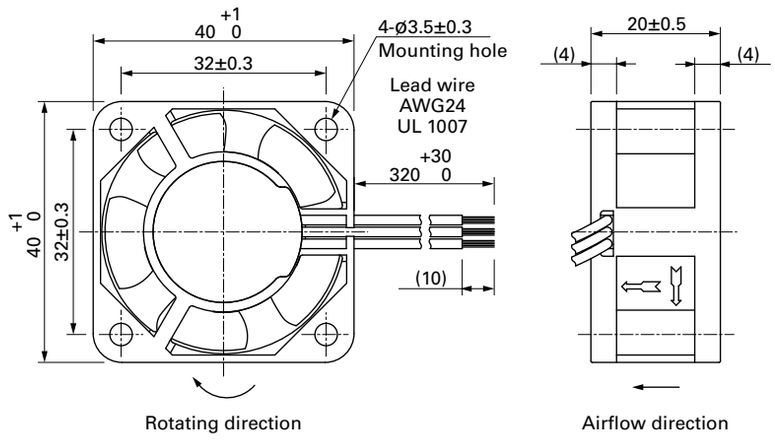

Reference Dimensions of Mounting Holes and Vent Opening (unit: mm)

Inlet side, Outlet side

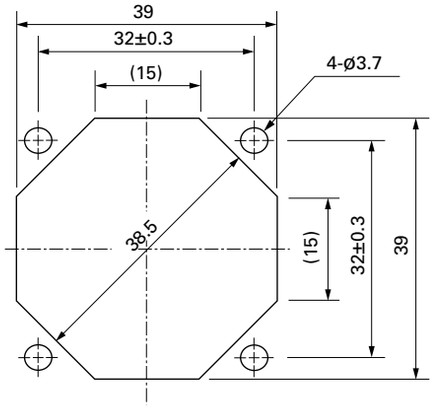

Options

Finger guards page: p. 598

Model no.: 109-059, 109-059H

Beijing Hengrui Mechanical and Electrical Equipment Co,Ltd
+86 10-62547612 zhangyu@bjhengrui.cn en.bjhengrui.com

40×40×28 mm

San Ace 40 9HVA type

General Specifications

- Material ..... Frame: Plastic (Flammability: UL 94V-0), Impeller: Plastic (Flammability: UL 94V-0)
- Expected life ..... See the table below. (L10 life: 90% survival rate for continuous operation in free air at 60˚C, rated voltage) Expected life at 40°C is for reference only.
- Motor protection function ..... Locked rotor burnout protection, Reverse polarity protection For details, please refer to p. 616.
- Dielectric strength ..... 50/60 Hz, 500 VAC, for 1 minute (between lead wire conductors and frame)
- Insulation resistance ..... 10 MΩ min. at 500 VDC (between lead wire conductors and frame)
- Sound pressure level (SPL) ..... A-weighted sound pressure level (SPL) at 1 m away from the air inlet.
- Storage temperature ..... -30 to +70˚C (Non-condensing)
- Lead wire ..... ⊕Red ⊖Black Sensor Yellow Control Brown
- Mass ..... 57 g

Specifications

The models listed below **have ribs and a pulse sensor with PWM control.**

Model no.	Rated voltage [V]	Operating voltage range [V]	PWM duty cycle* [%]	Rated current [A]	Rated input [W]	Rated speed [min⁻¹]	Max. airflow [m³/min]	Max. airflow [CFM]	Max. static pressure [Pa]	Max. static pressure [inchH₂O]	SPL [dB (A)]	Operating temperature [˚C]	Expected life [h]
9HVA0412P3J001	12	10.2 to 13.8	100	2.6	31.2	38000	1.05	37.1	2300	9.24	71	-20 to +70	30000/60˚C (53000/40˚C)
			20	0.12	1.4	8000	0.22	7.8	101	0.41	34		
9HVA0424P3G001	24	21.6 to 26.4	100	0.88	21.1	33000	0.92	32.5	1650	6.63	68		
			20	0.05	1.2	6750	0.18	6.4	74	0.30	31		

* PWM frequency is 25 kHz. Models without ratings for 0% PWM duty cycle have zero speed at 0%. When control terminal is open, speed is the same as at 100% duty cycle.

Note: Sensor and control options are available for selection. Refer to the table on p. 653.

Airflow - Static Pressure Characteristics / PWM Duty - Speed Characteristics Example

9HVA0412P3J001 With pulse sensor with PWM control

PWM duty cycle

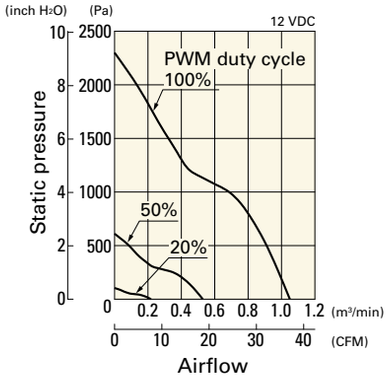

Operating voltage range

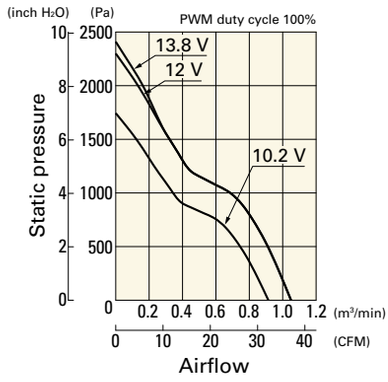

PWM duty - Speed characteristics example

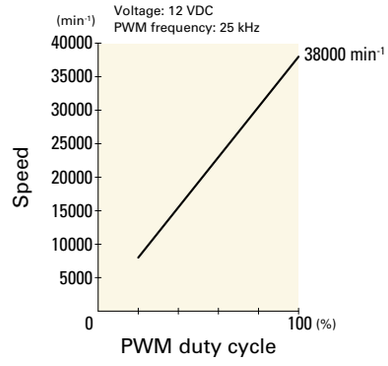

Beijing Hengrui Mechanical and Electrical Equipment Co,Ltd
+86 10-62547612 zhangyu@bjhengrui.cn en.bjhengrui.com